# Work Order ID 73702

*Tuesday, September 13, 2011 1:15:01 PM*



**Item ID:** D2237 **Accept** **Setup Start**

**Revision ID:** **Stop**

**Item Name:** Striker Plate

**Start Date:** 9/13/2011 **Start Qty:** 20.00 **Cust Item ID:** ASAP.

**Required Date:** 9/14/2011 **Req'd Qty:** 20.00 **Customer:**

**Reference:**

**Approvals:** **Process Plan:** MF **Date:** 11-09-13 **Tooling:** _____ **Date:** _____ **Run Start**

**QC:** _____ **Date:** _____ **SPC (Y/N):** _____ **Date:** _____ **Stop**

| Sequence ID/ Work Center ID | Operation Description | Set Up/ Run Hours | Tool ID | Tool # | Plan Code | Accept Qty | Reject Qty | Reject Number | Insp. Stamp |
|---|---|---|---|---|---|---|---|---|---|
| **Draw Nbr** | **Revision Nbr** | | | | | | | | |
| D2237 | Rev D1 | | | | | | | | |
| 100 | FLOW WATER JET | 0.00 | | | | | | | |
| Waterjet | **Memo** | 0.00 | | | | B11-9-13 | | | |
| FLOW CNC Waterjet | 1-Cut as per Dwg D necessary ☐Dwg Rev: D1 ☐Prog Rev: D1 ☐2-Deburr if | | | | | | | | |
| | | | | | | 64 | | | |
| 110 | QC2- Inspect parts off machine FAI/FAIB | 0.00 | | | | | | | |
| QC | **Memo** | 0.00 | | | | B11-9-13 | | | |
| Quality Control | | | | | | | | | |
| | | | | | | counts | | | |
| 120 | QC8- Inspect parts - second check | 0.00 | | | | x64 | | | |
| QC | **Memo** | 0.00 8 w/09/13 | | | | | | | |
| Quality Control | | | | | | | | | |

Dart Aerospace Ltd

| W/O: | | WORK ORDER CHANGES | | | | | |
|---|---|---|---|---|---|---|---|
| DATE | STEP | PROCEDURE CHANGE | By | Date | Qty | Approval Chief Eng / Prod Mgr | Approval QC Inspector |
| | | | | | | | |
| | | | | | | | |

**Part No:** _____ **PAR #:** _____ **Fault Category:** _____ **NCR:** Yes No **DQA:** _____ **Date:** _____

**Resolution:** _____ **Disposition:** _____ **QA: N/C Closed:** _____ **Date:** _____

| NCR: | | WORK ORDER NON-CONFORMANCE (NCR) | | | | | | |
|---|---|---|---|---|---|---|---|---|
| DATE | STEP | Description of NC Section A | Corrective Action Section B | | | Verification Section C | Approval Chief Eng | Approval QC Inspector |
| | | | Initial Chief Eng | Action Description Chief Eng | Sign & Date | | | |
| | | | | | | | | |
| | | | | | | | | |
| | | | | | | | | |

**NOTE:** Date & initial all entries

H:\fFORMS\Quality Assurance\approved QA\NCRWO RevE

# Work Order ID 73702

*Tuesday, September 13, 2011 1:15:01 PM*



**Item ID:** D2237 **Accept** **Setup Start**

**Revision ID:** **Stop**

**Item Name:** Striker Plate

**Start Date:** 9/13/2011 **Start Qty:** 20.00 **Cust Item ID:**

**Required Date:** 9/14/2011 **Req'd Qty:** 20.00 **Customer:**

**Reference:**

**Approvals:** **Process Plan:** _____ **Date:** _____ **Tooling:** _____ **Date:** _____ **Run Start**

**QC:** _____ **Date:** _____ **SPC (Y/N):** _____ **Date:** _____ **Stop**

| Sequence ID/ Work Center ID | Operation Description | Set Up/ Run Hours | Tool ID | Tool # | Plan Code | Accept Qty | Reject Qty | Reject Number | Insp. Stamp |
|---|---|---|---|---|---|---|---|---|---|
| 130 | Small Fab | 0.00 | | | | 64 | | | |
| Small Fab | **Memo** | 0.00 | | | | | | | |
| Small Fab | 1-Form as per drawing | | | | | | | | |
| | | | SB 11/09/14 | | | | | | |
| 140 | QC5- Inspect part completeness to step on W/O | 0.00 | | | | Counted x64 | | | |
| QC | **Memo** | 0.00 | Su 09/14 | | | | | | |
| Quality Control | | | | | | | | | |
| 150 | Identify as per dwg & Stock Location 009 | 0.00 | | | | | | | |
| Packaging | **Memo** | 0.00 | | | | 11/9/14 64 | | | |
| Packaging | | | | | | | | | |

Dart Aerospace Ltd

| W/O: | | WORK ORDER CHANGES | | | | | |
|---|---|---|---|---|---|---|---|
| DATE | STEP | PROCEDURE CHANGE | By | Date | Qty | Approval Chief Eng / Prod Mgr | Approval QC Inspector |
| | | | | | | | |
| | | | | | | | |

**Part No:** _____ **PAR #:** _____ **Fault Category:** _____ **NCR:** Yes No **DQA:** _____ **Date:** _____

**Resolution:** _____ **Disposition:** _____ **QA: N/C Closed:** _____ **Date:** _____

| NCR: | | WORK ORDER NON-CONFORMANCE (NCR) | | | | | | |
|---|---|---|---|---|---|---|---|---|
| DATE | STEP | Description of NC Section A | Corrective Action Section B | | | Verification Section C | Approval Chief Eng | Approval QC Inspector |
| | | | Initial Chief Eng | Action Description Chief Eng | Sign & Date | | | |
| | | | | | | | | |
| | | | | | | | | |
| | | | | | | | | |

**NOTE:** Date & initial all entries

H:\fFORMS\Quality Assurance\approved QA\NCRWO RevE

# Work Order ID 73702

*Tuesday, September 13, 2011 1:15:01 PM*



**Item ID:** D2237 **Accept** **Setup Start**

**Revision ID:**

**Item Name:** Striker Plate **Stop**

**Start Date:** 9/13/2011 **Start Qty:** 20.00 **Cust Item ID:**

**Required Date:** 9/14/2011 **Req'd Qty:** 20.00 **Customer:**

**Reference:**

**Approvals:** **Process Plan:** _____ **Date:** _____ **Tooling:** _____ **Date:** _____ **Run Start**

**QC:** _____ **Date:** _____ **SPC (Y/N):** _____ **Date:** _____ **Stop**

| Sequence ID/ Work Center ID | Operation Description | Set Up/ Run Hours | Tool ID | Tool # | Plan Code | Accept Qty | Reject Qty | Reject Number | Insp. Stamp |
|---|---|---|---|---|---|---|---|---|---|
| 160 | QC21- Final Inspection - Work Order Release | 0.00 | | | | | | n/a/14 | |
| QC<br>Quality Control | **Memo** | 0.00 | | | | | | | |

MF 11-09-14

Dart Aerospace Ltd

| W/O: | | WORK ORDER CHANGES | | | | | |
|---|---|---|---|---|---|---|---|
| DATE | STEP | PROCEDURE CHANGE | By | Date | Qty | Approval Chief Eng / Prod Mgr | Approval QC Inspector |
| | | | | | | | |
| | | | | | | | |

**Part No:** _____ **PAR #:** _____ **Fault Category:** _____ **NCR:** Yes No **DQA:** _____ **Date:** _____

**Resolution:** _____ **Disposition:** _____ **QA: N/C Closed:** _____ **Date:** _____

| NCR: | | WORK ORDER NON-CONFORMANCE (NCR) | | | | | | |
|---|---|---|---|---|---|---|---|---|
| DATE | STEP | Description of NC Section A | Corrective Action Section B | | | Verification Section C | Approval Chief Eng | Approval QC Inspector |
| | | | Initial Chief Eng | Action Description Chief Eng | Sign & Date | | | |
| | | | | | | | | |
| | | | | | | | | |
| | | | | | | | | |

**NOTE:** Date & initial all entries

H:\fFORMS\Quality Assurance\approved QA\NCRWO RevE

# Picklist Print

*Tuesday, September 13, 2011 1:14:51 PM*



**Work Order ID:** 73702

**Parent Item:** D2237

**Parent Item Name:** Striker Plate

**Start Date:** 9/13/2011 **Required Date:** 9/14/2011

**Start Qty:** 20.00 **Required Qty:** 20.00

**Comments:** IPP C□02.05.11□Clarify IPP□NG□
IPP D 06.05.25 Waterjet EC

| Component Item ID/ Item Name | Replacement Item ID | Mfg/ Purch | Bin Item | Primary Location | Last Location | Route Seq ID | Unit of Measure | Qty on Hand | Qty per Kit | Total Qty | Qty Issued | Date Issued | Status |
|---|---|---|---|---|---|---|---|---|---|---|---|---|---|
| M304S22GA<br>304/316 .032 Sheet | | Purchased | No | | | 100 | sf | 139.3600 | 0.01 | 0.210526 | 1, B11-9-13 | | |

| Location | | Loc Qty | Loc Code | |
|---|---|---|---|---|
| 020 | | 3.3 | | |
| | 109057 | 3.3 | | |
| MAT020 | | 136.06 | | |
| | 117379 | 32.56 | | 117379 |
| | 118271 | 96 | | |
| | 118400 | 7.5 | | |

64

Dart Aerospace Ltd

| W/O: | | WORK ORDER CHANGES | | | | | |
|---|---|---|---|---|---|---|---|
| DATE | STEP | PROCEDURE CHANGE | By | Date | Qty | Approval Chief Eng / Prod Mgr | Approval QC Inspector |
| | | | | | | | |
| | | | | | | | |

**Part No:** _____ **PAR #:** _____ **Fault Category:** _____ **NCR:** Yes No **DQA:** _____ **Date:** _____

**Resolution:** _____ **Disposition:** _____ **QA: N/C Closed:** _____ **Date:** _____

| NCR: | | WORK ORDER NON-CONFORMANCE (NCR) | | | | | | |
|---|---|---|---|---|---|---|---|---|
| DATE | STEP | Description of NC Section A | Corrective Action Section B | | | Verification Section C | Approval Chief Eng | Approval QC Inspector |
| | | | Initial Chief Eng | Action Description Chief Eng | Sign & Date | | | |
| | | | | | | | | |
| | | | | | | | | |
| | | | | | | | | |

**NOTE:** Date & initial all entries

H:\FORMS\Quality Assurance\approved QA\NCRWO RevE

| DART AEROSPACE LTD | Work Order: | 73702 |
|---|---|---|
| | | |
| **Description:** Striker Plate | Part Number: | D2237 |
| | | |
| **Inspection Dwg:** D2237 **Rev:** D1 | | Page 1 of 1 |

## FIRST ARTICLE INSPECTION CHECKLIST

[X] First Article [ ] Prototype

| Drawing Dimension | Tolerance | Actual Dimension | Accept | Reject | Method of Inspection | Comments |
|---|---|---|---|---|---|---|
| 0.300 | +/-0.010 | .301 | ✓ | | V IBoZ | |
| 0.250 | +/-0.010 | .251 | ✓ | | V | |
| 1.550 | +/-0.010 | 1.547 | ✓ | | V | |
| 1.800 | +/-0.010 | 1.802 | ✓ | | V | |
| 0.750 | +/-0.010 | .749 | ✓ | | V | |
| Ø0.128 | +0.005/-0.001 | .132 | ✓ | | V | |
| 0.034 | +/-0.010 | .033 | ✓ | | V | |
| | | | | | | |
| | | | | | | |
| | | | | | | |
| | | | | | | |
| | | | | | | |
| | | | | | | |
| | | | | | | |
| | | | | | | |
| | | | | | | |
| | | | | | | |
| | | | | | | |
| | | | | | | |
| | | | | | | |
| | | | | | | |
| | | | | | | |
| | | | | | | |
| | | | | | | |
| | | | | | | |

| Measured by: | IB | Audited by: | | Prototype Approval: | N/A |
|---|---|---|---|---|---|
| Date: | 11-9-13 | Date: | 11/09/13 | Date: | N/A |

| Rev | Date | Change | Revised by | Approved |
|---|---|---|---|---|
| A | 07.05.31 | New Issue | KJ/JLM | |

Dart Aerospace Ltd

| W/O: | | WORK ORDER CHANGES | | | | | |
|---|---|---|---|---|---|---|---|
| DATE | STEP | PROCEDURE CHANGE | By | Date | Qty | Approval Chief Eng / Prod Mgr | Approval QC Inspector |
| | | | | | | | |
| | | | | | | | |

**Part No:** _____ **PAR #:** _____ **Fault Category:** _____ **NCR:** Yes No **DQA:** _____ **Date:** _____

**Resolution:** _____ **Disposition:** _____ **QA: N/C Closed:** _____ **Date:** _____

| NCR: | | WORK ORDER NON-CONFORMANCE (NCR) | | | | | | |
|---|---|---|---|---|---|---|---|---|
| DATE | STEP | Description of NC Section A | Corrective Action Section B | | | Verification Section C | Approval Chief Eng | Approval QC Inspector |
| | | | Initial Chief Eng | Action Description Chief Eng | Sign & Date | | | |
| | | | | | | | | |
| | | | | | | | | |
| | | | | | | | | |

**NOTE:** Date & initial all entries

H:\FORMS\Quality Assurance\approved QA\NCRWO RevE

| DESIGN | DRAWN BY | DART AEROSPACE LTD<br>VICTORIA INTERNATIONAL AIRPORT, CANADA |
|---|---|---|
| B WILLIAMS | B WILLIAMS | |
| CHECKED | APPROVED | DRAWING NO. D2237 — REV. D — SHEET 1 OF 1 |
| DATE 94:10:25 | | TITLE STRIKER PLATE — SCALE 2:1 |
| D1 | # 04.06.15 | UPDATE DIMENSION |

RELEASED 97/12/17 DS

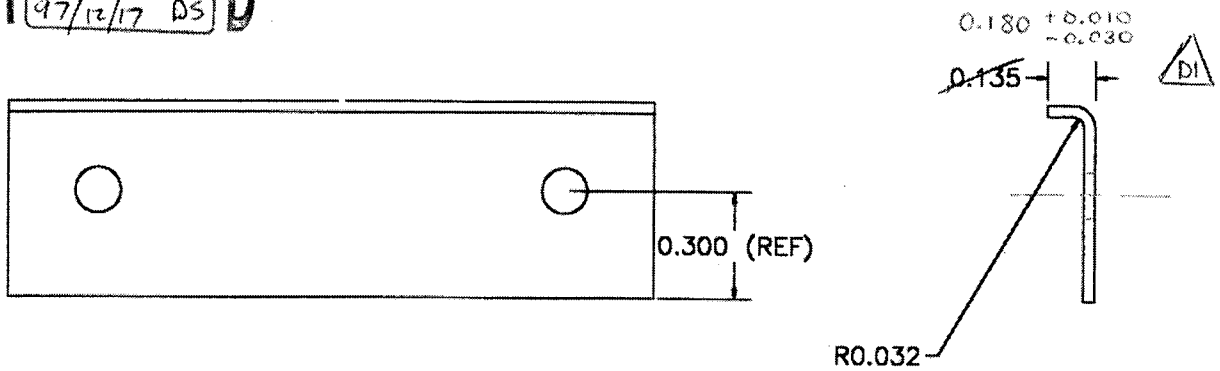


BEND DETAIL

# 73702

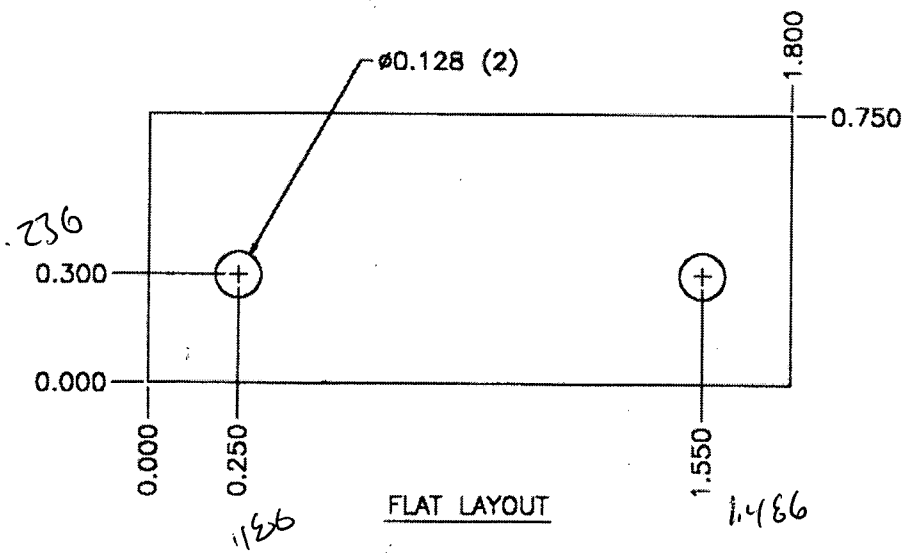


FLAT LAYOUT

MATERIAL: 304/316 SS, 0.034 THICK

Copyright 1994 by DART AEROSPACE LTD

Dart Aerospace Ltd

| W/O: | | WORK ORDER CHANGES | | | | | |
|---|---|---|---|---|---|---|---|
| DATE | STEP | PROCEDURE CHANGE | By | Date | Qty | Approval Chief Eng / Prod Mgr | Approval QC Inspector |
| | | | | | | | |
| | | | | | | | |

**Part No:** _____ **PAR #:** _____ **Fault Category:** _____ **NCR:** Yes No **DQA:** _____ **Date:** _____

**Resolution:** _____ **Disposition:** _____ **QA: N/C Closed:** _____ **Date:** _____

| NCR: | | WORK ORDER NON-CONFORMANCE (NCR) | | | | | | |
|---|---|---|---|---|---|---|---|---|
| DATE | STEP | Description of NC Section A | Corrective Action Section B | | | Verification Section C | Approval Chief Eng | Approval QC Inspector |
| | | | Initial Chief Eng | Action Description Chief Eng | Sign & Date | | | |
| | | | | | | | | |
| | | | | | | | | |
| | | | | | | | | |

**NOTE:** Date & initial all entries

H:\fFORMS\Quality Assurance\approved QA\NCRWO RevE